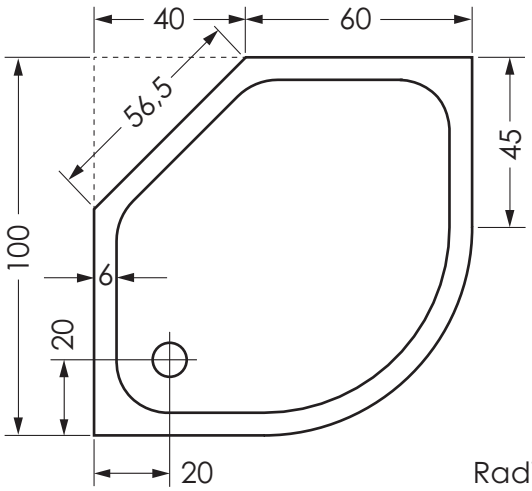
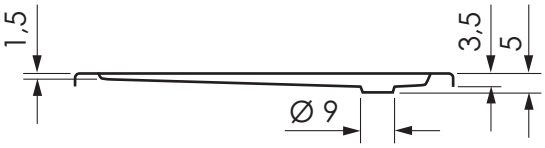
Radius 55 cm